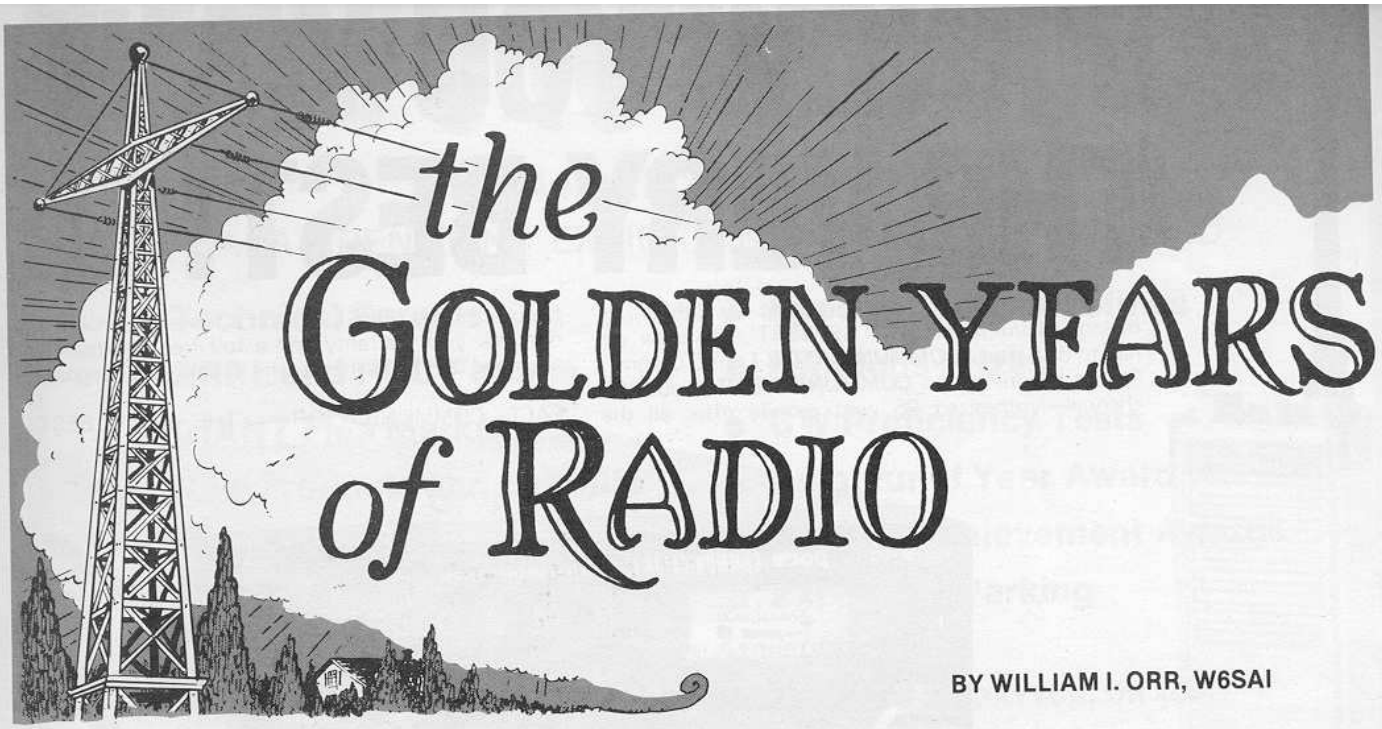

BY WILLIAM I. ORR, W6SAI

The Doerle Shortwave Receiver

It's December, 1931. New York City is snowbound after weeks of bad weather and is in the midst of a paralyzing financial depression. Over 30 per cent of the work force is unemployed. The stock market has plunged to new depths of gloom. The radio industry is at a standstill. The broadcast-set construction boom had collapsed, and the ac-operated receiver had not yet reached the market in quantity.

In the lower New York City area, the many small radio distributors were in trouble. Some of them closed their doors forever, and the ones that had managed to stay open had few customers. Something was needed to break out of the dismal cycle of bad weather, unemployment, and economic stagnation. For the nation as a whole the bad weather would soon dissipate, but the economic picture looked black — all except for a handful of small, grimy, radio stores in the Vessey-Cortland-Dey-street area that had unexpectedly stumbled onto a gold mine that proved to be their salvation for a few years.

Shortwave radio! It caught the public's fancy some time in 1931. Young men, unemployed, with plenty of time on their hands, started the craze. For only a few dollars you could buy a small shortwave receiver that would literally "pull in the world." And the interest was aroused by an obscure radio fan in Oakland, California, who popularized a two-tube regenerative receiver.

Little is known today about Walter C. Doerle of Oakland. He's not listed in the telephone book, and he faded from fame about 1934. In any event, he designed and built a simple two-tube shortwave receiver and wrote about it for publication in the December, 1931, issue of *Short Wave Craft* magazine. The little set was inexpensive to built and sure-fire in operation. This was the right radio at the right time!

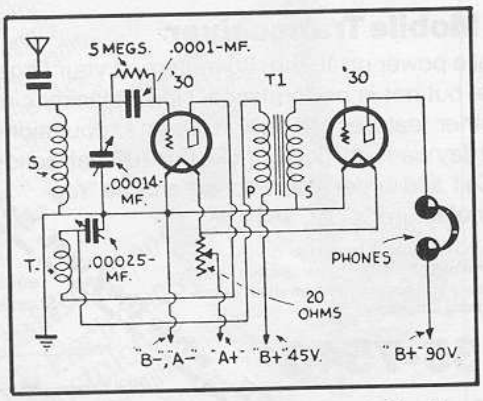

Fig. 1. Circuit used by Mr. Doerle for the 2-tube "globe circler."

No doubt Doerle was surprised at the explosive interest in his little radio! Requests for more information poured into the magazine, along with glowing reports of how the inexpensive, easy-to-build radio pulled in stations all over the globe. The Doerle receiver became famous overnight.

The Doerle receiver

After the original article on the receiver, Walter Doerle gradually faded from the scene. He wrote one or two other radio articles, but his fame was quickly taken over by a group of small radio stores on New York City's "radio row," who knew a good thing when they saw it. It's not known if Doerle made any financial profit from his radio, but his name became a household word for any simple shortwave set. "Doerle clubs" sprang up around the country and "Doerle circuits" were sold as kits and as complete radios.

Amazingly, most radio hams had never heard of the Doerle receiver. It seemed to be advertised only in radio magazines catering to the

shortwave listener (SWL) and the home constructor. But as shortwave listening became a popular pastime (much as CB radio is today), the Doerle designs were duplicated by the uncounted thousands.

The Doerle receiver was simplicity in itself (**Fig. 1**). It was a simple, two-tube regenerative receiver. One tube served as a regenerative detector and one tube as an audio amplifier. An "A" battery for the filament supply, and 90 volts of "B" battery, were required to run the receiver. **Figs. 2** and **3** show modified versions of the receiver.

Originally designed for the low-drain type 30 tubes, the receiver worked equally well with the cheap, plentiful type 201A tubes and a second-hand 6-Volt automobile battery for the filament supply. And later, the Doerle circuit would be redesigned for the new type 227 ac-operated triode tubes.

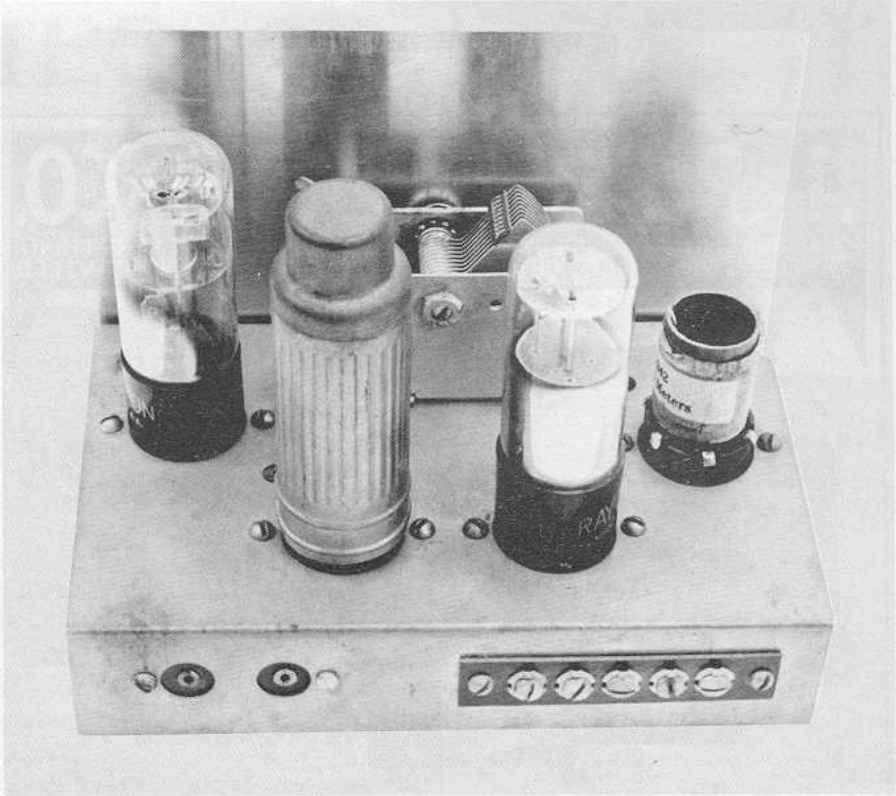

Doerle type regenerative receiver built from a 1938 kit. This battery-operated receiver uses a 1F4G as a detector, a 1H5G audio amplifier, and a 1C5G second audio stage. The 1F4G detector is in the center with a metal shield over the tube. Shortwave spectrum from 10 to 200 meters is covered with four plug-in coils. When wired up, the receiver worked right off the bat!

Building the Doerle receiver

Most builders ignored the Doerle kits, even though they sold for less than five dollars for the economy-model receiver. Two tubes could be obtained for less than 25 cents at a rummage sale or radio junk shop. The audio transformer? Free, or perhaps 15 cents from the same source. Tube sockets were easy to obtain and cheap, even if bought new. Coils? Wind them on bases from burned-out tubes. And the tuning condensers* could be bought new for less than a dollar, or could be cut down from larger condensers salvaged from an old battery receiver.

According to the pictorial drawing, the Doerle was built on a wooden base: plywood or "breadboard," measuring about 203 by 305 mm (8 by 12 inches). That gave plenty of room for parts. The parts were arranged so that the panel was reason-

*Yep, they were known as condensers in those days. Today we call 'em capacitors. ***Editor.***

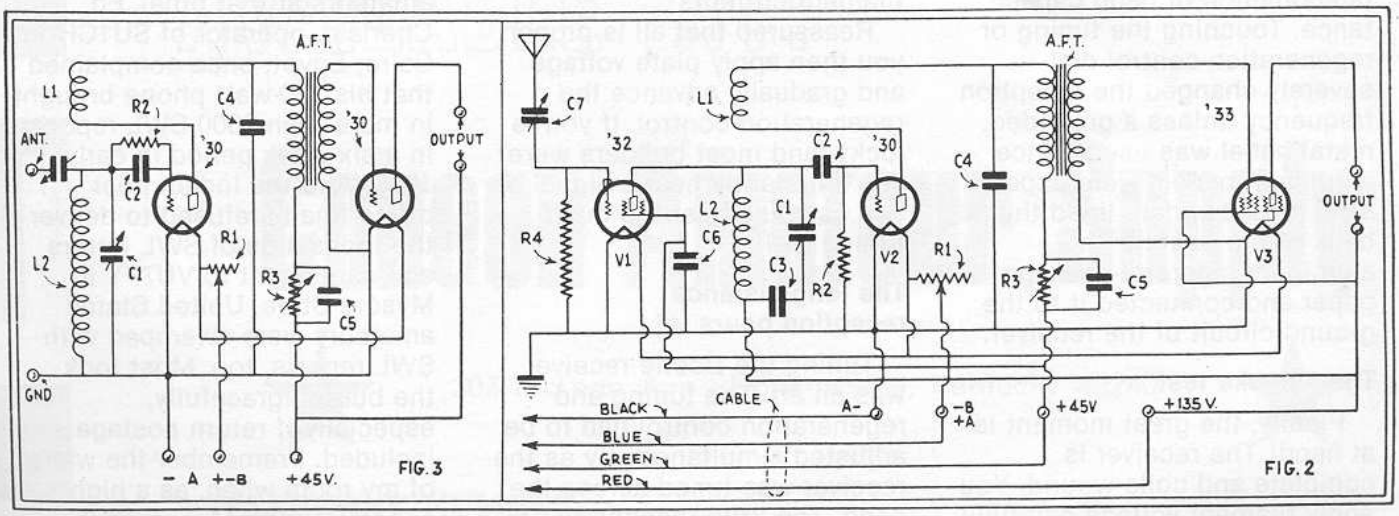

Fig. 2. The same two-tube receiver shows up in the schematic diagram at left, but with a few parts changes — note the variable coupling capacitor from the antenna terminal. Inevitably, the circuit was adapted for mobile use, shown at right with an rf amplifier ahead of the detector.

Harrison Radio Company sold a Doerle receiver kit for less than five dollars. To save cost, regeneration was controlled by varying the detector plate voltage by potentiometer R3. The feedback capacitor, C4, was fixed.

ably symmetrical. The antenna coupling capacitor (oops! condenser) was cut from two small sheets of brass, or from a tin can if brass wasn't available.

Rarely mentioned was the phenomenon of hand capacitance. Touching the tuning or regeneration-control dial severely changed the reception frequency unless a grounded, metal panel was used. Since aluminum panels were expensive, most builders lined the back of the panel with aluminum cigarette-package paper and connected it to the ground circuit of the receiver.

The "smoke test"

Finally, the great moment is at hand! The receiver is complete and coils wound. You apply filament voltage carefully and examine the type 30 tubes in a darkened room to make sure the filaments are lighted. A recheck of the wiring is usually necessary at this point, as inadvertent application of the B voltage to the filament circuit guarantees instant burnout of the two tubes, each of which draws only 60 mA of filament current.

Reassured that all is proper, you then apply plate voltage and gradually advance the regeneration control. If you're lucky (and most builders were) you'll instantly hear a signal or two as you adjust the main tuning dial.

The long-distance reception pours in!

Tuning the Doerle receiver was an art. The tuning and regeneration control had to be adjusted simultaneously as the receiver was tuned across the band. Too little regeneration meant no signal; too much meant a howl in the headphones. The adjustment of the antenna capacitor was attempted, too — the plates being bent back and forth in relation to each other. More daring experimenters tried various values of "grid leak" (grid resistor). From 2 to 5 megohms seemed about right.

Once the tuning technique was established, the world was at the fingertips of the listener. Old standbys such as Rugby, England; VK2ME and VK3ME in Australia; and HVJ in the Vatican poured in along with lesser lights such as PCJ in Holland and VE9GW in Canada. The most sought-after station was a home-built 7-1/2 watt broadcaster in Costa Rica, on the air with a call "borrowed" from the U.S. Navy. The listener who heard NRH in Heredia, Costa Rica, was lucky indeed.

When SWLing was a fine art

Unlike today, radio amateurs in the prewar era received SWL cards from all over the world. Since ssb was unknown in those dear dead days, amateurs used simple amplitude modulation (a-m) which could be easily received on a simple Doerle receiver (just reduce the regeneration control). Collecting SWL reports was a hobby that was probably greater than amateur radio (there were about 30000 amateurs at that time). Ed Chorlain, operator of SU1CH in Cairo, Egypt, once complained that his 150-watt phone brought in more than 3000 SWL reports in a six-week period in early 1935! And the Indian post office finally refused to deliver the thousands of SWL letters and cards sent to VU7FY in Mysore State. United States amateurs were swamped with SWL reports, too. Most took the burden gracefully, especially if return postage was included. I remember the walls of my room when, as a high-school student, I roamed the shortwave bands as an eager SWL. When I got my ham ticket, I stripped the walls of

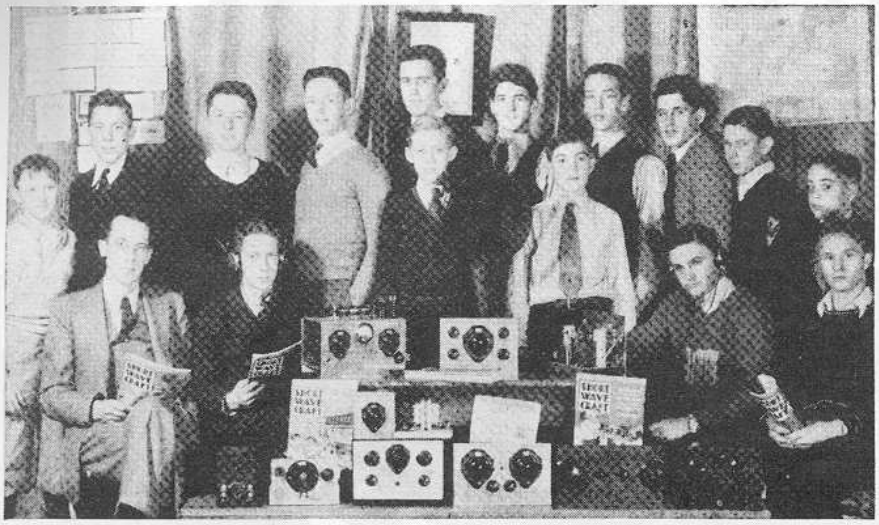

Doerle Radio Clubs sprang up all over the country in the 1930s. Homebuilt shortwave radio receivers were the rage, especially among the high-school set. This 1935 photograph shows the radio club of the Waupun High School of Wapun, Wisconsin. (*Photo reproduced from Short Wave Craft magazine*).

SWL cards, hoping to fill them with *real* QSLs from the contacts I hoped to make.

The Doerle becomes an industry

After the original excitement, the Doerle circuit gave way to more exotic receivers. Three-, four-, five- and six-tube Doerle receivers appeared on the market, some rigged up in good-looking, crackle-finished metal cabinets. Most, however, were merely the original circuit adapted to ac, with audio stages added to work a loud speaker. But they remained the first receiver of thousands of shortwave enthusiasts, many of whom became radio amateurs after their initial, thrilling exposure to shortwave radio through the sure-fire Doerle circuit.

By 1938 the Doerle fad had expired. The two-tube regenerative receiver, while still built by some beginners, was eclipsed by low-cost shortwave superheterodyne receivers. Modeled after the inexpensive broadcast receivers, the little superhets quickly took over the shortwave beginner's market. The depression was fading, more money was changing hands, and the radio enthusiast could afford a more expensive receiver. Soon the Doerle circuit was forgotten. But it had done its part to sustain the New York radio industry when the days were black and the future insecure.

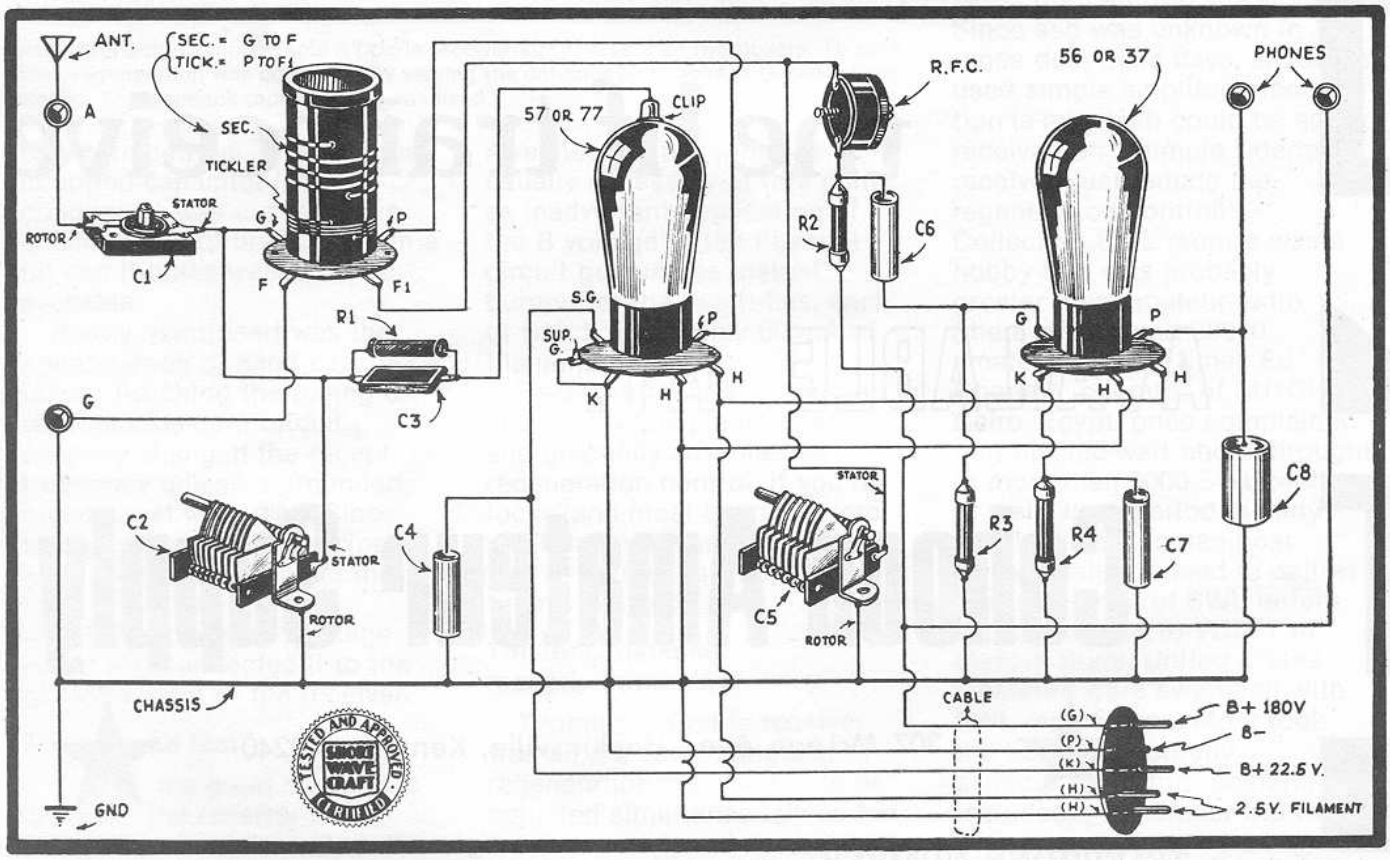

Fig. 3. The schematic diagram is typical of those seen in the early 1930s, and experimenters were helped by the clear picturized diagram" like the one above. Tube sockets were used for the plug-in coil forms, and carried their original filament, grid, and plate designations as a means of identifying where the wires were to be connected. Note the seal of approval of *Short Wave Craft* magazine, a means of inspiring builder confidence.

Build a Doerle receiver today?

Why not? The Doerle is a fun radio and can be built for little or nothing if you have a good junk box, or are a good scrounger at a flea market. Choose one of the many circuits shown in this article. I suggest you make it on a piece of plywood and use a grounded aluminum panel to reduce the effects of hand capacitance. Probably the ac circuit is best today, as dc tubes are microphonic, hard to find, and require a hum-free filament supply. The ac circuit can use any of the following tube types: 227, 56, 76, 6C5, 6J5, or 6C4. Surely you have two of these in your junk box!

The audio transformer can be a replacement "three-to-one" type, and the rf choke can be a 2.5 millihenry pi-wound affair. If you feel like a pioneer, you can wind the coils on 4-prong tube bases or other insulating material, about 32 mm (1-1/4 inches) in diameter. The lucky scrounger might come up with a set of commercially wound coils made for these little receivers! As for the rf choke, the original Doerle used a home made one. It consisted of 300 turns of 0.13-mm (no. 36) double silk covered wire, close wound on a 13-mm (1/2-inch) diameter wood dowel rod. Operation of the choke can be checked by pressing the earphone cord in your hand when the set is operating. If no change occurs in the received signal, the choke is doing its duty.

Listening in today

Today's radio spectrum is far different from what it was in the early thirties. Hearing a signal was a significant feat then; today the powerful signals and heavy congestion of the short-wave channels make reception a problem of receiver overload. The little Doerle (in common with all regenerative receivers) is highly susceptible to signal overload. The pigmy antenna-coupling capacitor helps, but you should use a short antenna with this set — 5-6 meters (15-20 feet) of wire is sufficient. A longer antenna will lead to severe receiver blocking and overload. To prevent instability, moreover, the antenna should be firmly supported so it won't swing about in the wind. A moving antenna will affect the tuning of the receiver. An indoor antenna is suggested.

Why not have the fun of building a Doerle receiver? I can't think of any circuit that will provide more simple pleasure in construction and use than the Doerle circuit. You'll be surprised at how the signals pour in on the little set. The signals will not be loud, as the circuit lacks audio power. But the signals will be there, and the sensitivity of a regenerative set is equal to that of the more expensive receivers of 1978! With patience and experience, the Doerle receiver will

By 1933 "electrified" Doerle receivers were the big sellers. You could get one completely wired and tested for less than 15 dollars. Of course, tubes were extra, for $2.68 a set.

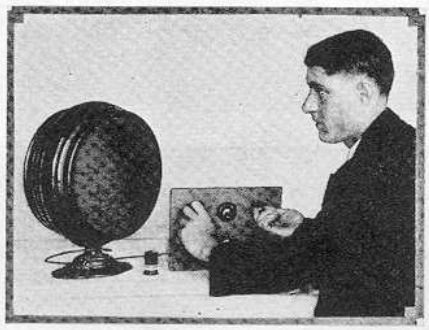

Fig. 4. The only published photograph of Mr. Doerle was in *Short Wave Craft* magazine for November, 1932. He is shown demonstrating his new DX receiver which was capable of driving a loudspeaker. Doerle's article describing the receiver was entitled "A 3-Tube Signal Gripper."

perform wonders for you and you'll gain appreciation of some of the heritage that's behind today's hobby of amateur radio.

Further reading

The formative years of radio (or electronics as we know it today) make interesting reading for newcomers and old timers alike. The bibliography that follows lists some articles published by *ham radio* and *Ham Radio Horizons* that describe how it used to be. Your local library probably has copies of some of the early radio magazines. During those years you could find these radio magazines on the news stands sandwiched between *Collier's, Liberty*, and *The Women's Home Companion*.

Bibliography

Nagle, John J. K4KJ, "Those Good Ol' Radio Magazines," *Ham Radio Horizons*, December 31, 1977, pages 38-47.

Orr, William I., W6SAI, "1929 — 1941, The Golden Years of Amateur Radio," *ham radio*, April, 1976, pages 34-38.

Orr, William I., W6SAI, "The Golden Years of Radio," *Ham Radio Horizons*, May, 1978, pages 40-43.

Orr, William I., W6SAI, "The Golden Years of Radio — The Way it Was — 40 Years Ago," *Ham Radio Horizons*, March, 1977, pages 32-36.

HRH